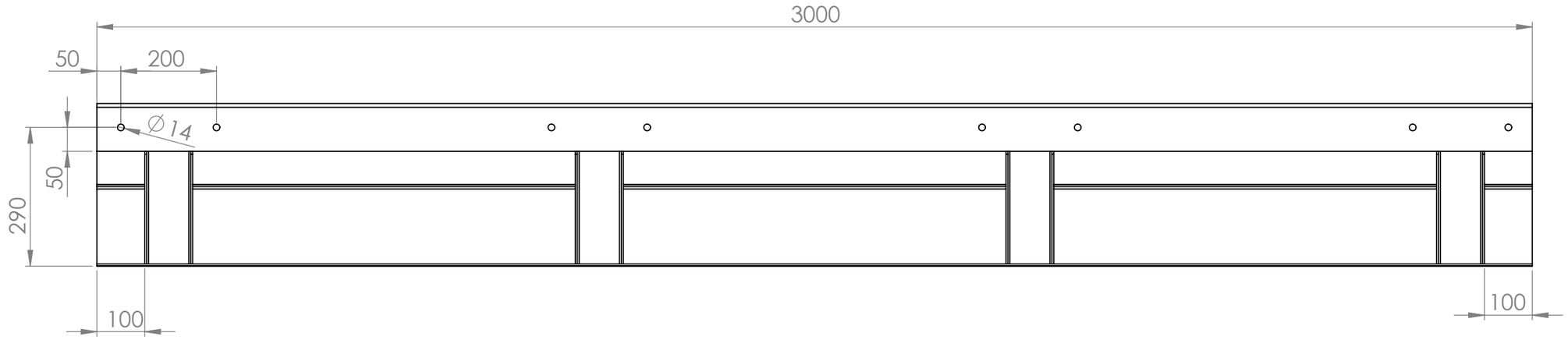


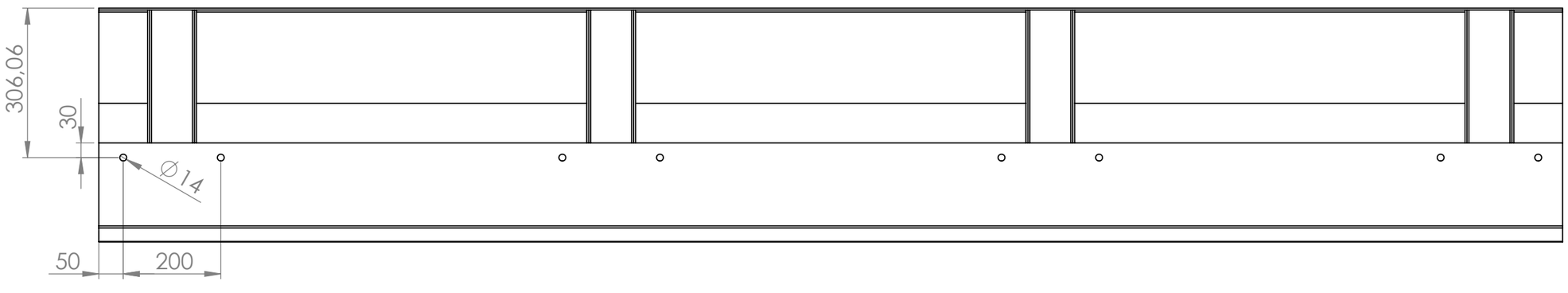


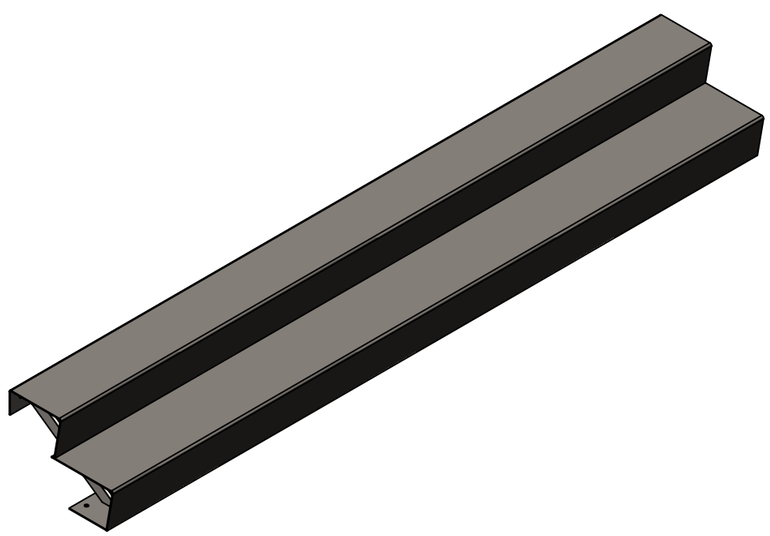

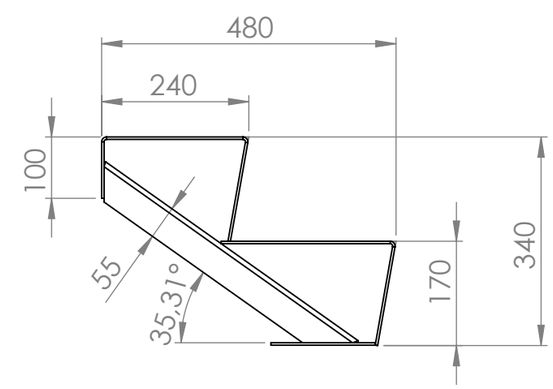


| | | DATE | |
|---|---|---|---|
| DRAWN | Luuk van den Heuvel | 25-5-2022 | |
| REVISION | | | |

ADEZZ®
WE PRODUCE GARDEN PRODUCTS FOR PROFESSIONALS

Liessentstraat 4, 5405 AG Uden (NL).
t 0031 (0)413 - 27 41 68.
e info@adezz.com, i www.adezz.com

TITLE:

4mm Aluminum

Drawing.

AST2.6

A3

Color: -

Mass (kg): **40.20**

SCALE:1:10

SHEET 1 OF 6